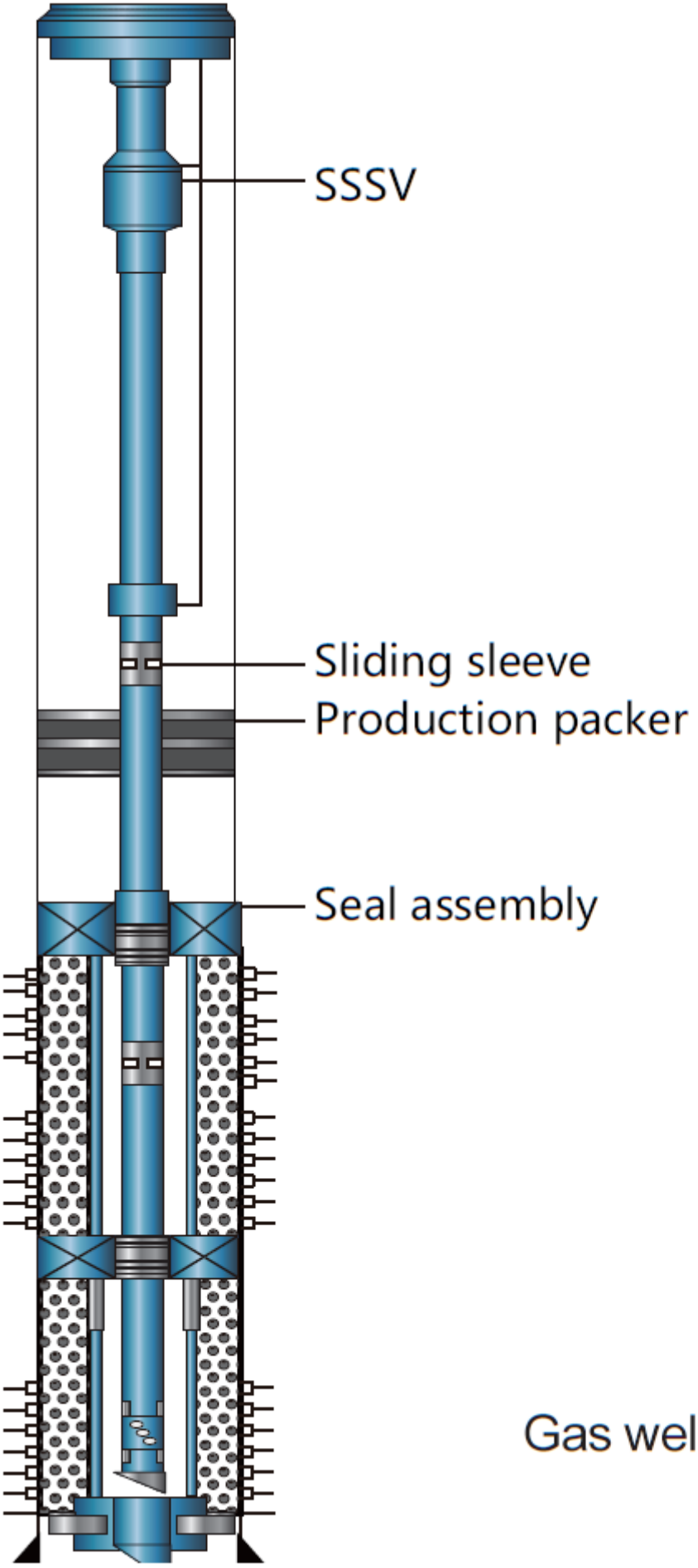

Gas well string